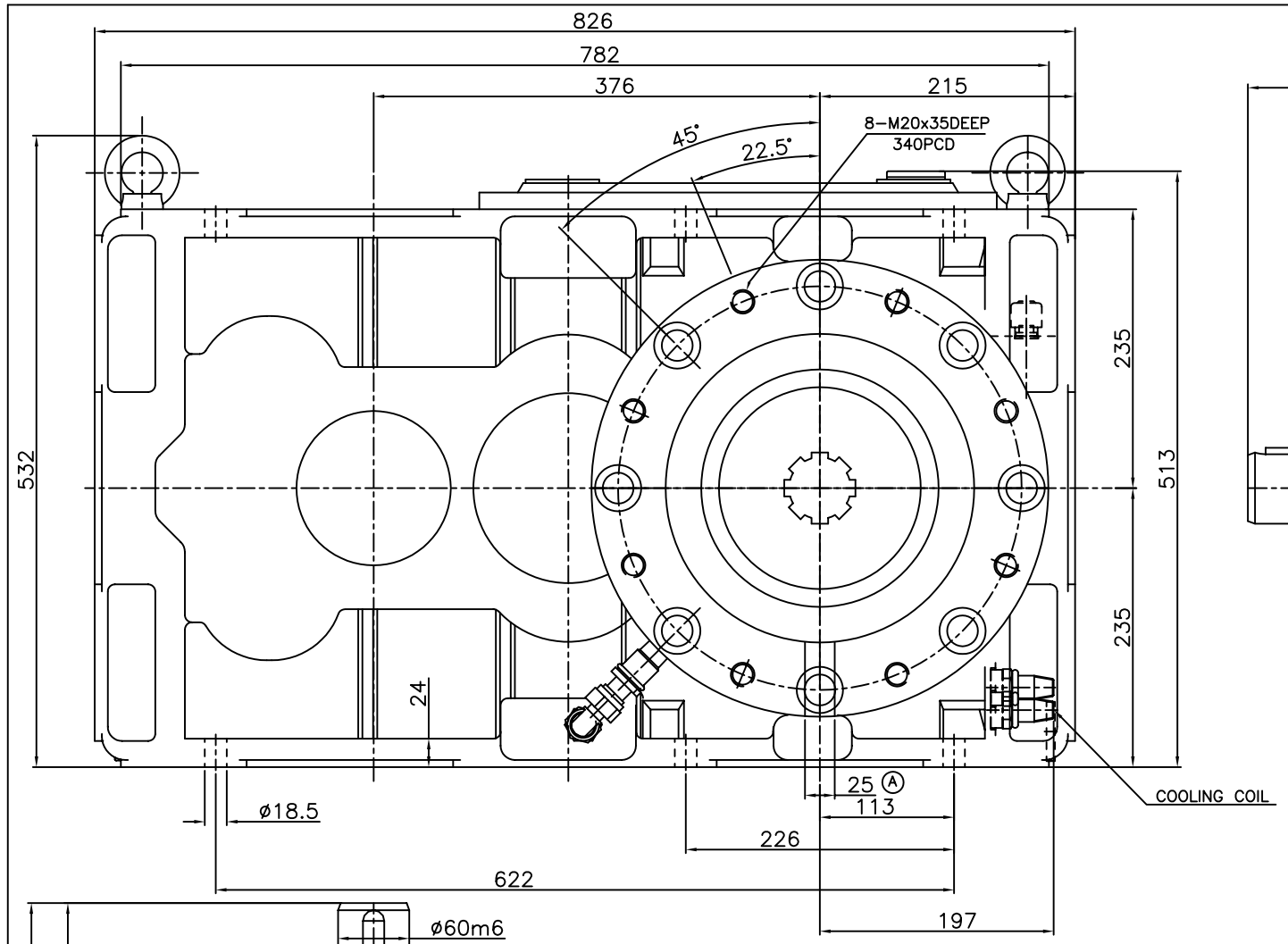

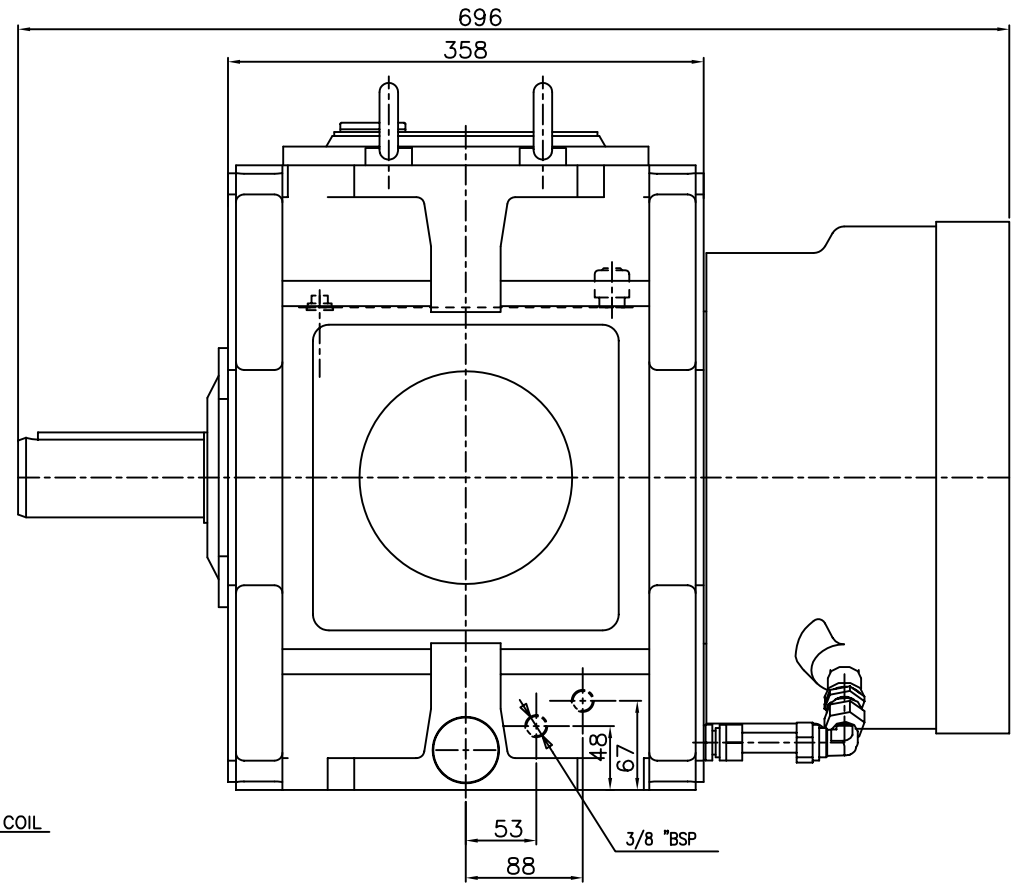

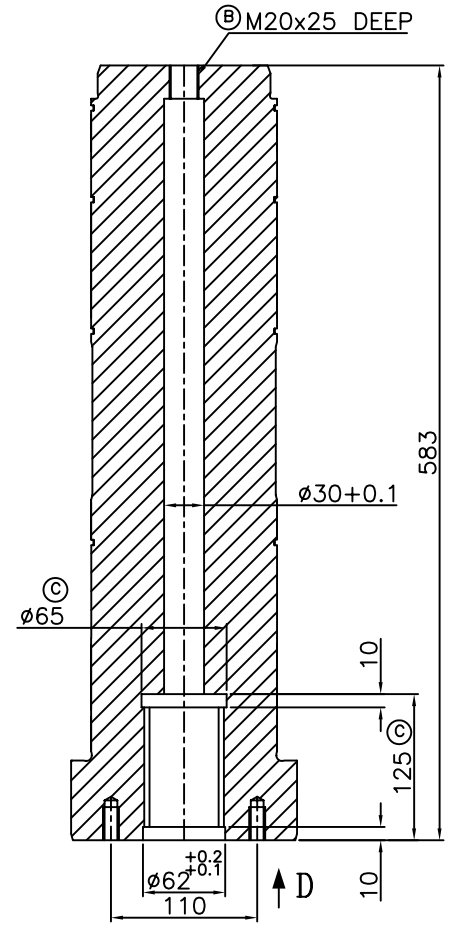

INSIDE DESIGN OF HOLLOW SHAFT

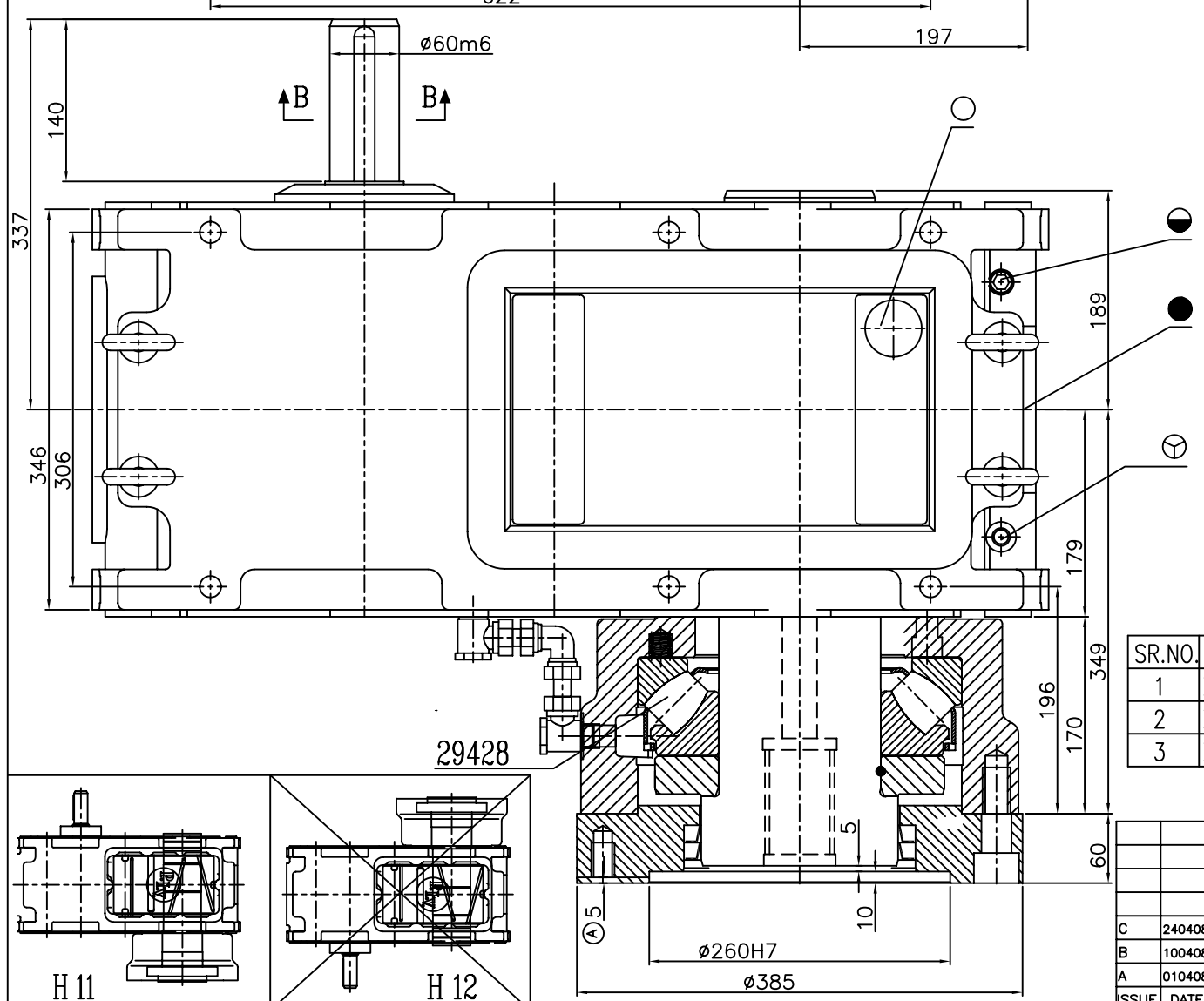

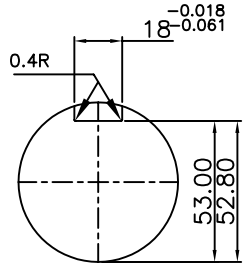

SECTION-BB

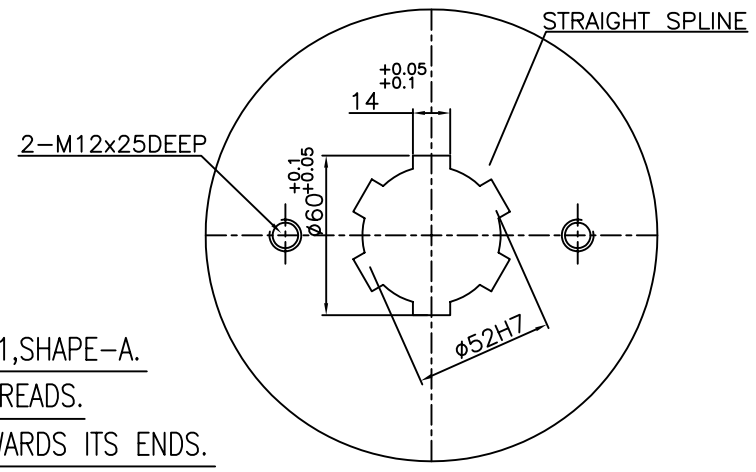

VIEW ON-D Ⓒ

NOTE:

SHAFT ENDS WITH KEYS ACCORDING TO DIN 6885,PART-1,SHAPE-A.

SHAFT CENTERING ACCORDING TO DIN -332 DS WITH THREADS.

DIRECTION OF ROTATION OF OUTPUT SHAFT LOOKING TOWARDS ITS ENDS.

DIMENSIONS CERTIFIED FOR CONSTRUCTION.

APPROX. TOTAL WEIGHT WITHOUT OIL- 530 KGS.

REQUIRED APPROX. OIL QUANTITY PER GEAR BOX : 31LTRS.

LUBRICATING OIL: SERVOMESH SP 320 OR EQUI.

SR.NO.	DESCRIPTION	NOMINAL RATIO	ACTUAL RATIO	NOMINAL POWER	RPM	QTY.
1	XC22-R11-H11-R10-Z3-428	10:1	9.80:1	264 KW	1500	1
2	XC22-R11-H11-R14-Z3-428	14:1	14.0:1	189 KW	1500	1
3	XC22-R11-H11-R18-Z3-428	18:1	17.3:1	145 KW	1500	1

Filling plug
Oil level
Oil drain
Breather plug

ISSUE	DATE	AMMENDMENTS
C	240408	DRAWING CHANGED AS PER CLIENT REQUIREMENT.
B	100408	DRAWING CHANGED AS PER CLIENT REQUIREMENT.
A	010408	DRAWING CHANGED AS PER CLIENT REQUIREMENT.

DRAWN DATE: Upendra 23.2.07
CHK .BY DATE: N.G.Pandya 23.2.07
APPROVED DATE: N.G.Pandya 23.2.07
SCALE :

DIMENSION SHEET FOR XC22-R11-H11- -Z3-428

ORDER NO.: SENMAK

PERMISSIBLE DEVIATION FOR UNMACHINED LINEAR DIMENSIONS.

0,5...6	>6...30	>30...120	>120...400	>400...1000	>1000...2000
± 0,1	± 0,2	± 0,3	± 0,5	± 0,8	± 1,2

PERMISSIBLE DEVIATION OF ANGULAR DIMENSIONS.(Shorter side of angle)

RANGE OF LENGTHS .	...10	>10...50	>50...120	>120...400	>400
DEVIATIONS	± 1°	± 30'	± 20'	± 10'	± 5'

THIS DRG. IS PROPERTY OF ELECON ENGG.CO.LTD., LOANED TO THE RECIPIENT WHO AGREES THAT IT SHOULD NOT BE GIVEN OUT COPIED OR DUPLICATED FOR THE USE OF OTHERS BUT ONLY USED BY THE RECIPIENT FOR THE PURPOSE OF MAINTAINING THE EQUIPMENT TO WHICH IT REFERS.

ELECON

DRG.NO : 516-00-1212

ISSUE Ⓒ

555X405