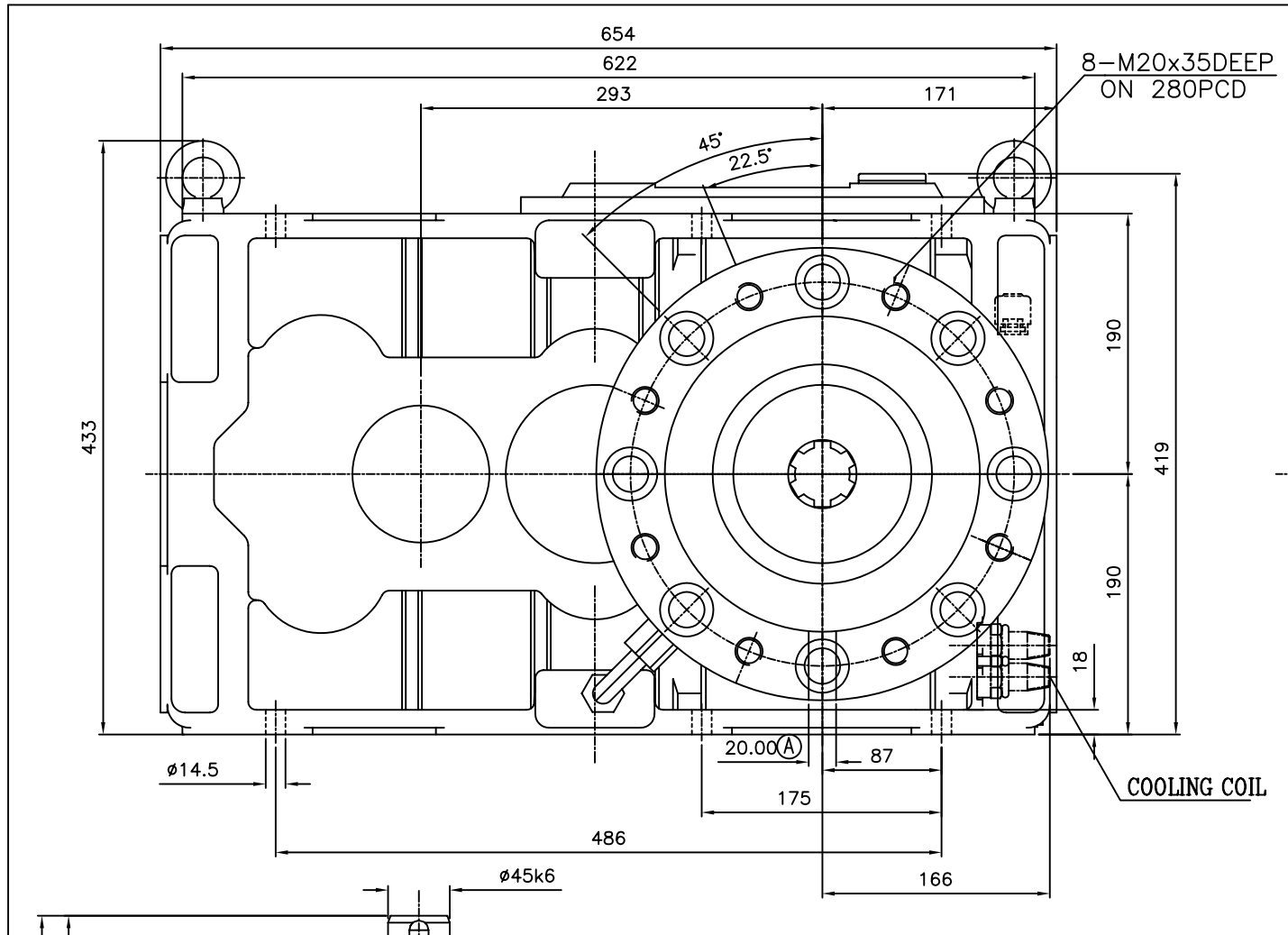

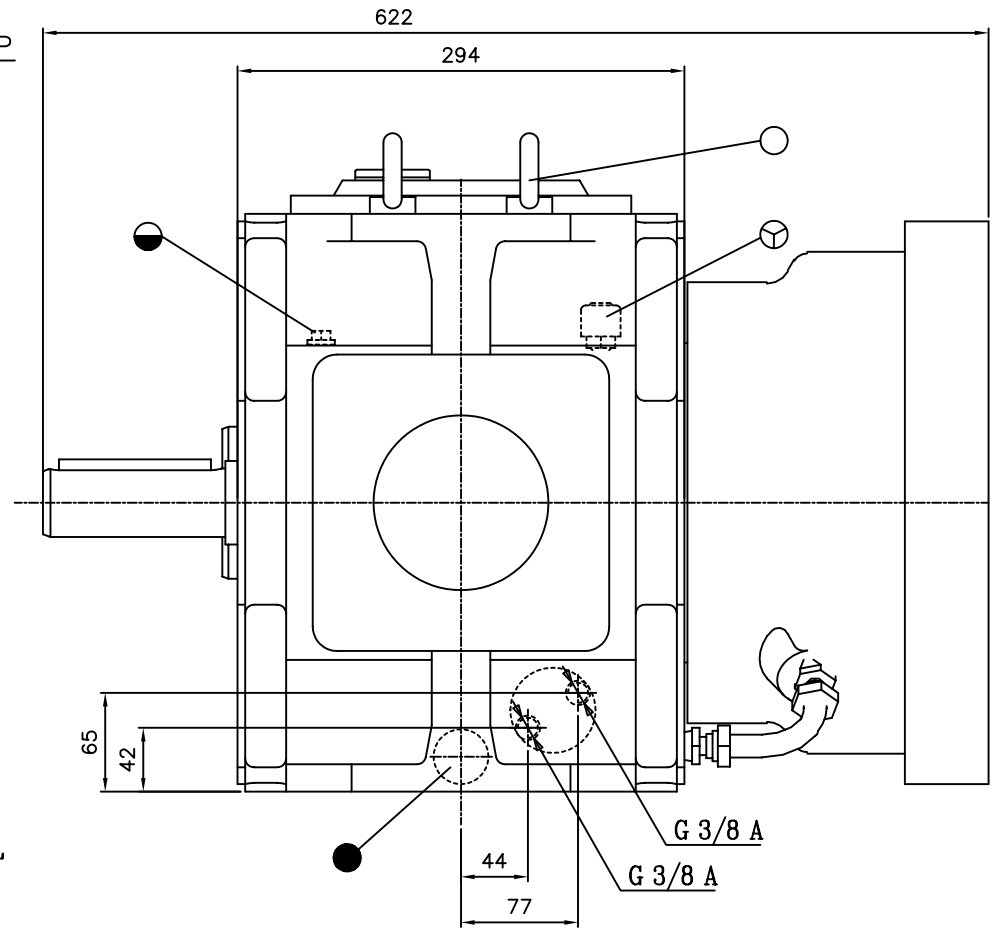

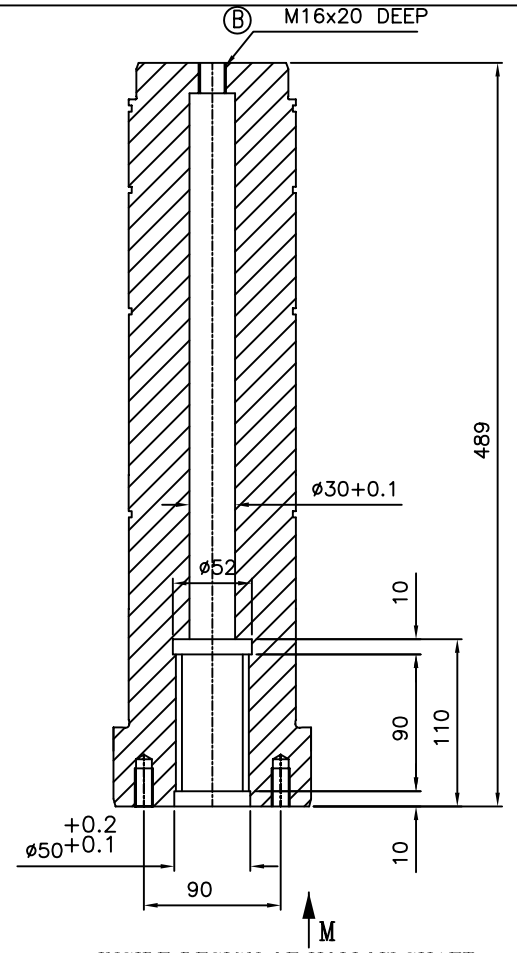

INSIDE DESIGN OF HOLLOW SHAFT

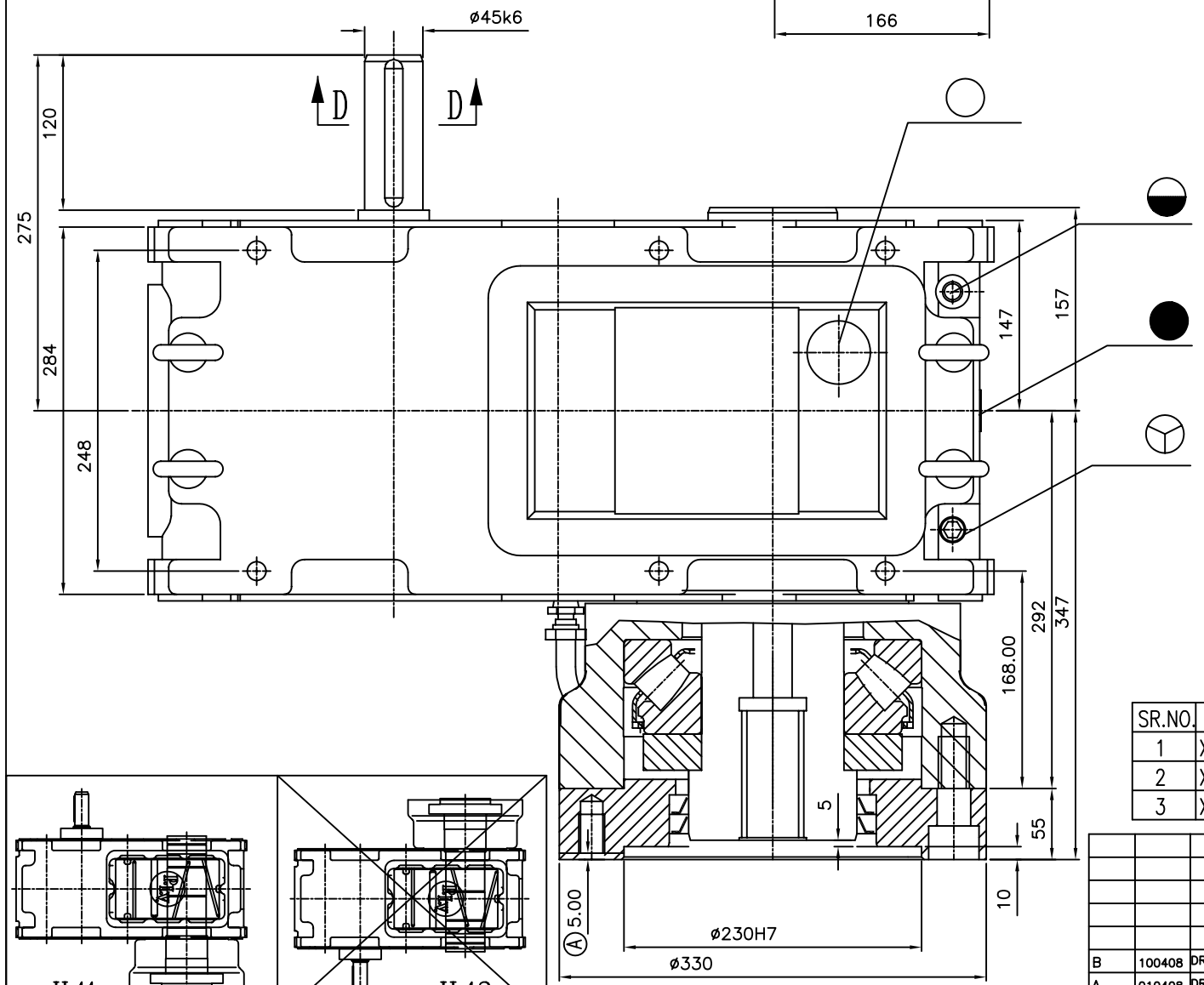

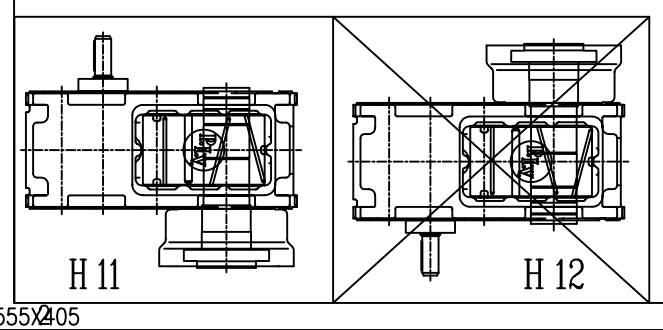

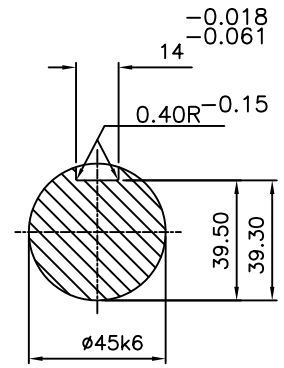

SECTION-DD

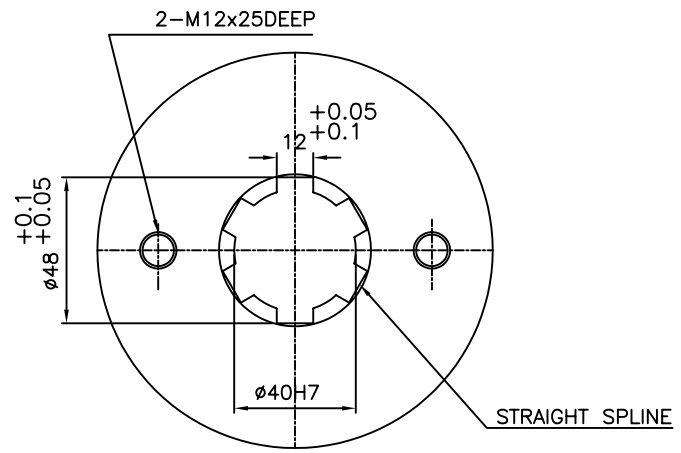

VIEW ON -M

NOTE:

SHAFT ENDS WITH KEYS ACCORDING TO DIN 6885,PART-1,SHAPE-A.
SHAFT CENTERING ACCORDING TO DIN -332 DS WITH THREADS.
DIRECTION OF ROTATION OF OUTPUT SHAFT LOOKING TOWARDS ITS ENDS.
DIMENSIONS CERTIFIED FOR CONSTRUCTION.
APPROX. TOTAL WEIGHT WITHOUT OIL- 300 KGS.
REQUIRED APPROX. OIL QUANTITY PER GEAR BOX : 17 LTRS.
LUBRICATING OIL: SERVOMESH SP 320 OR EQUI.

SR.NO.	DESCRIPTION	NOMINAL RATIO	ACTUAL RATIO	NOMINAL POWER	RPM	QTY.
1	XC18-R11-H11-R10-Z3-422	10:1	9.90:1	139 KW	1500	1
2	XC18-R11-H11-R14-Z3-422	14:1	14.2:1	94 KW	1500	1
3	XC18-R11-H11-R18-Z3-422	18:1	17.8:1	71 KW	1500	1

Filling plug
Oil level
Oil drain
Breather plug

PERMISSIBLE DEVIATION FOR UNMACHINED LINEAR DIMENSIONS.					
0,5...6	>6...30	>30...120	>120...400	>400...1000	>1000...2000
± 0,1	± 0,2	± 0,3	± 0,5	± 0,8	± 1,2

PERMISSIBLE DEVIATION OF ANGULAR DIMENSIONS.(Shorter side of angle)					
RANGE OF LENGTHS .	...10	>10...50	>50...120	>120...400	>400
DEVIATIONS	± 1°	± 30'	± 20'	± 10'	± 5'

ISSUE	DATE	AMMENDMENTS
B	100408	DRAWING CHANGED AS PER CLIENT REQUIREMENT.
A	010408	DRAWING CHANGED AS PER CLIENT REQUIREMENT.

DRAWN DATE: Upendra 20.2.07
CHK .BY DATE: N.G.Pandya 20.2.07
APPROVED DATE: N.G.Pandya 20.2.07
SCALE :

DIMENSION SHEET FOR
XC18-R11-H11- -Z3-422

ORDER NO.: SENMAK

THIS DRG. IS PROPERTY OF ELECON ENGG.CO.LTD., LOANED TO THE RECIPIENT WHO AGREES THAT IT SHOULD NOT BE GIVEN OUT COPIED OR DUPLICATED FOR THE USE OF OTHERS BUT ONLY USED BY THE RECIPIENT FOR THE PURPOSE OF MAINTAINING THE EQUIPMENT TO WHICH IT REFERS.

ELECON
DRG.NO : 516-00-1210
ISSUE B

555X405