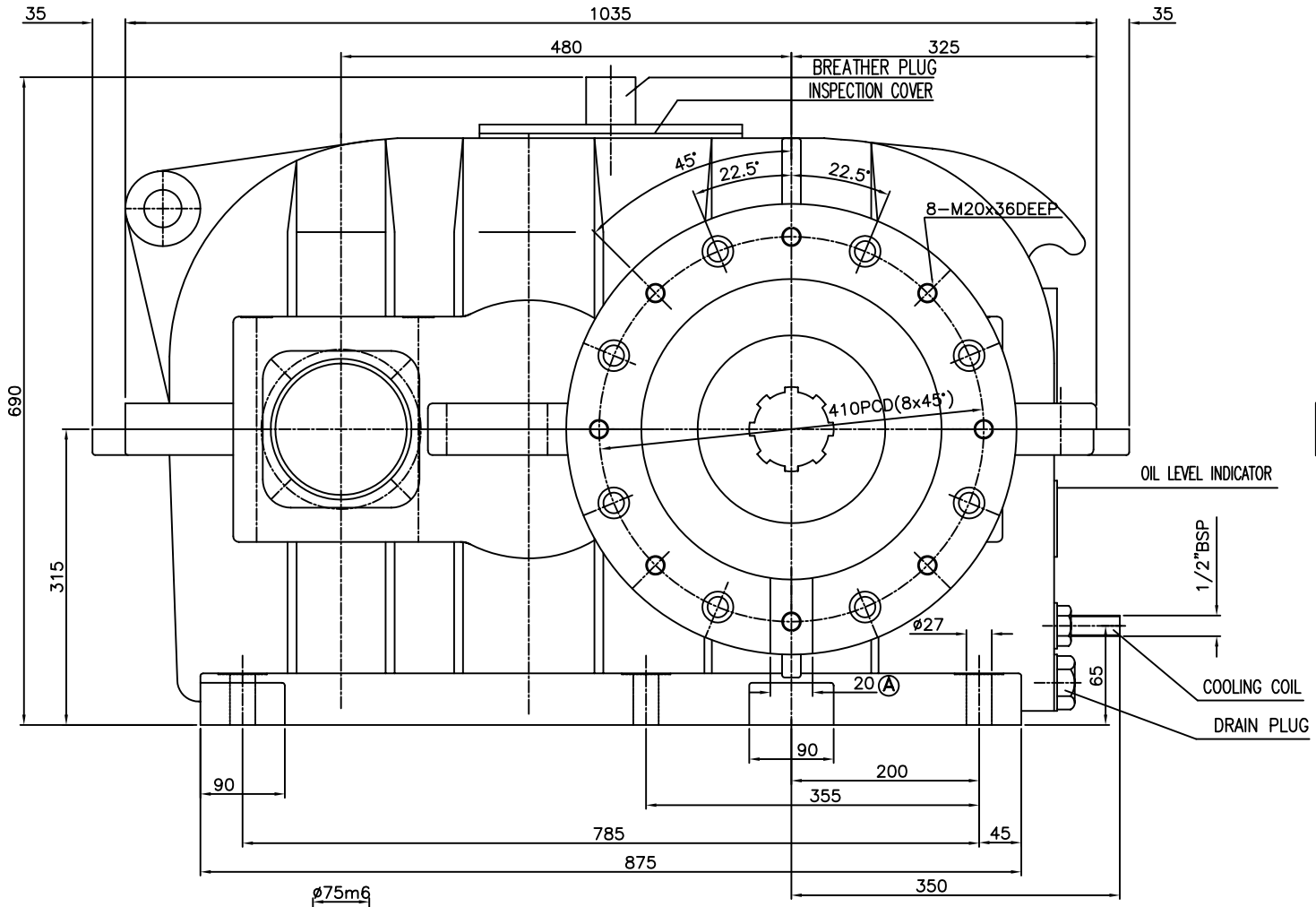

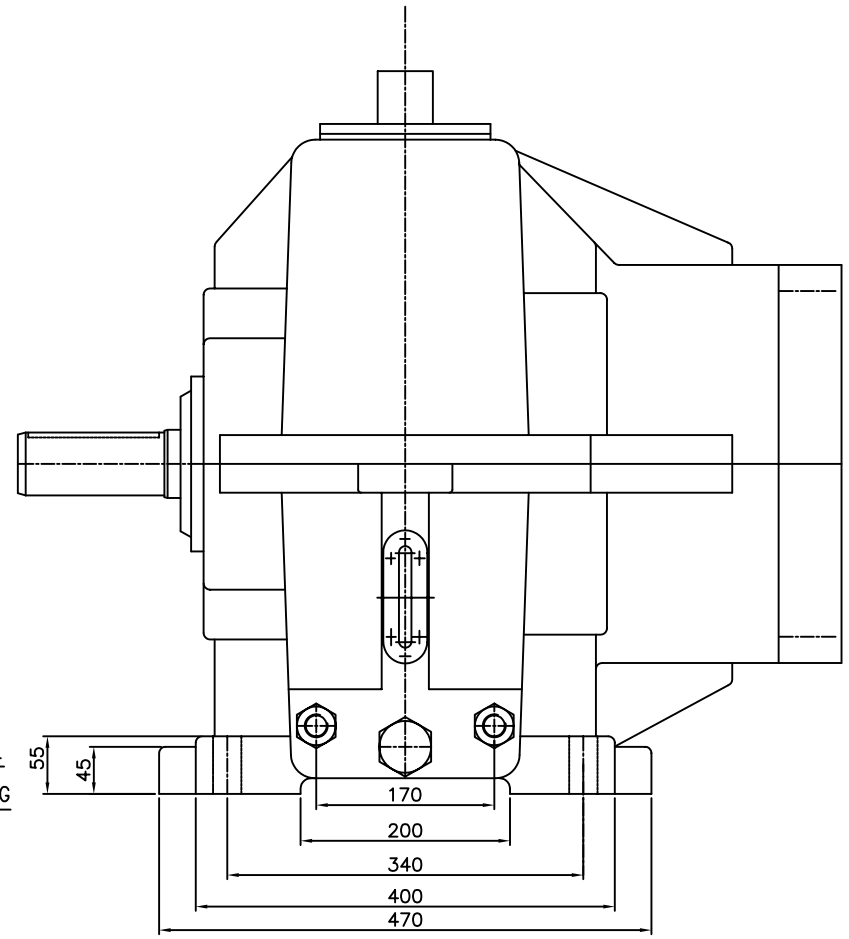

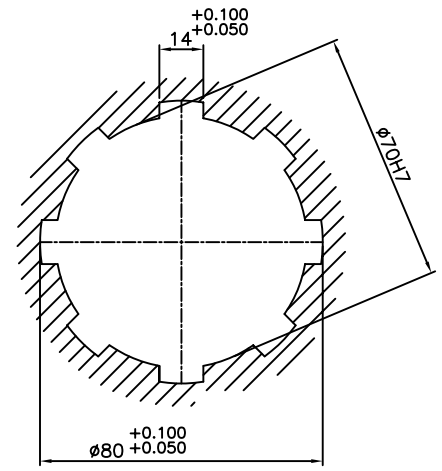

SPLINE DETAIL(OUTPUT)

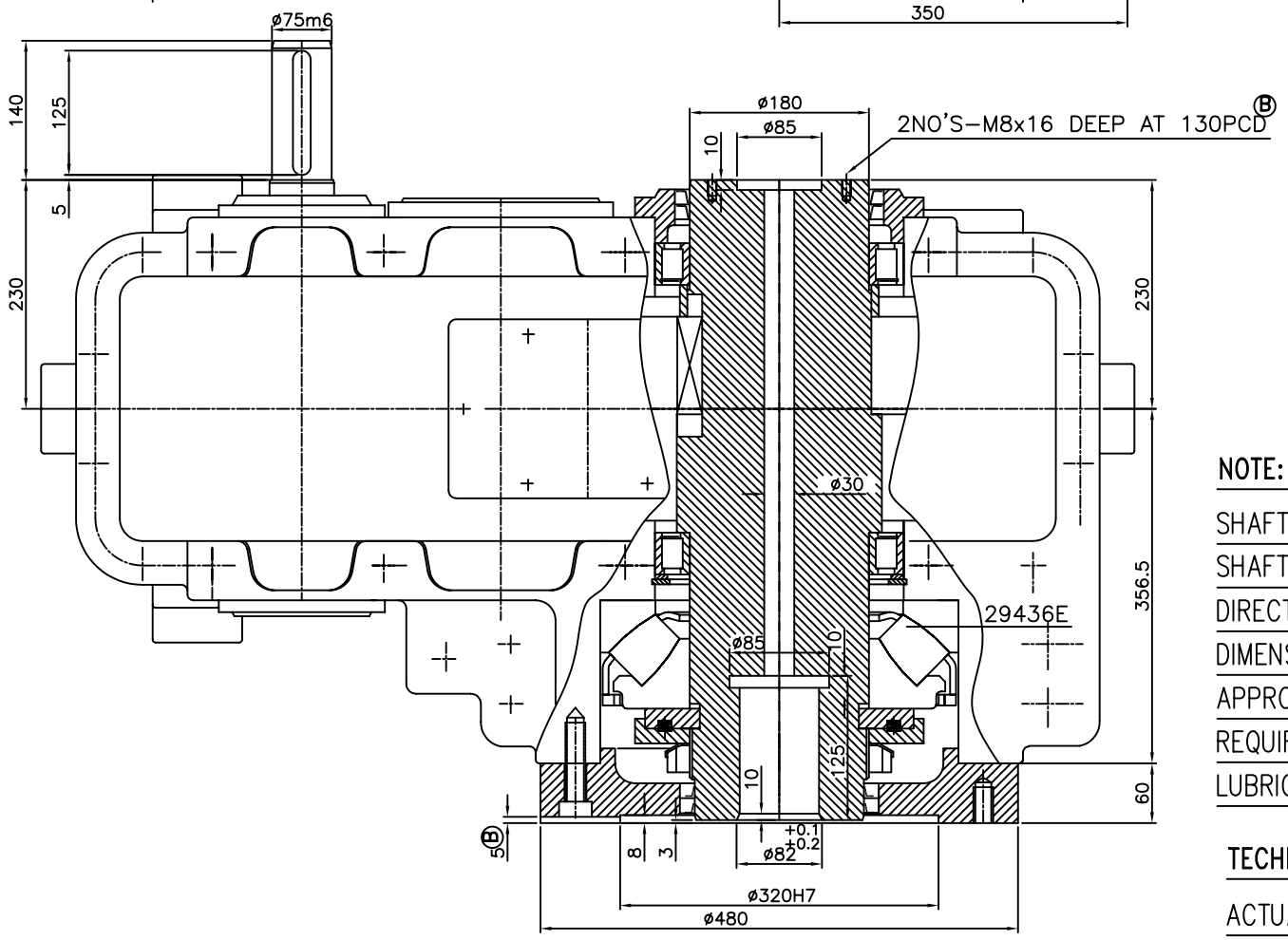

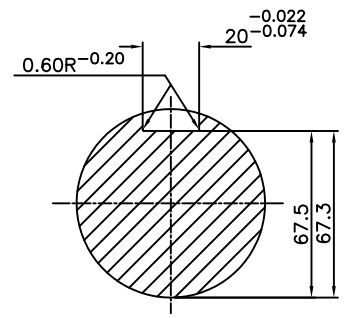

KEYWAY DETAIL(INPUT)

R:10:1

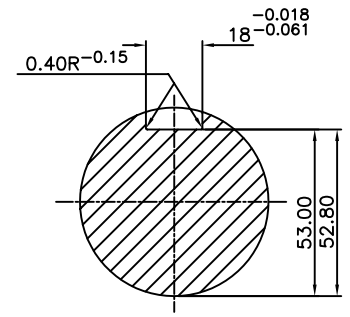

KEYWAY DETAIL(INPUT)

R:14:1 R:18:1

NOTE:

SHAFT ENDS WITH KEYS ACCORDING TO DIN 6885,PART-1,SHAPE-A.
SHAFT CENTERING ACCORDING TO DIN -332 DS WITH THREADS.
DIRECTION OF ROTATION OF OUTPUT SHAFT LOOKING TOWARDS ITS ENDS.
DIMENSIONS CERTIFIED FOR CONSTRUCTION.
APPROX. TOTAL WEIGHT WITHOUT OIL: 725 KGS.
REQUIRED APPROX. OIL QUANTITY PER GEAR BOX :29 LTRS.
LUBRICATING OIL: SERVOMESH SP 320 OR EQUI.

RATIO	ACTUAL RATIO	INPUT DIA.	INPUT SHAFT EXT.LENG.
14:1	14.118:1	60	140
18:1	17.778:1	60	140

TECHNICAL SPECIFICATION:

ACTUAL RATIO : 9.8824:1

ISSUE	DATE	AMMENDMENTS
B	290308	DIM. ADDED AS PER CLIENT REQUIREMENTS.
A	060307	DIM. MARKED AS Ⓐ ADDED AS PER CLIENT REQUIREMENTS.

DRAWN DATE	KETKI JOSHI 10th.Feb.07	
CHECKED DATE	NIMESH PANDYA 10th.Feb.07	
APPROVED DATE		

DIMENSION SHEET FOR

SBH-280/EXT. 29436E BEARING

SCALE : ORDER NO :

THIS DRG. IS PROPERTY OF ELECON ENGG.CO.LTD., LOANED TO THE RECIPIENT WHO AGREES THAT IT SHOULD NOT BE GIVEN OUT COPIED OR DUPLICATED FOR THE USE OF OTHERS BUT ONLY USED BY THE RECIPIENT FOR THE PURPOSE OF MAINTAINING THE EQUIPMENT TO WHICH IT REFERS.

ELECON

DRG.NO : 703-00-8151

ISSUE B

555X405