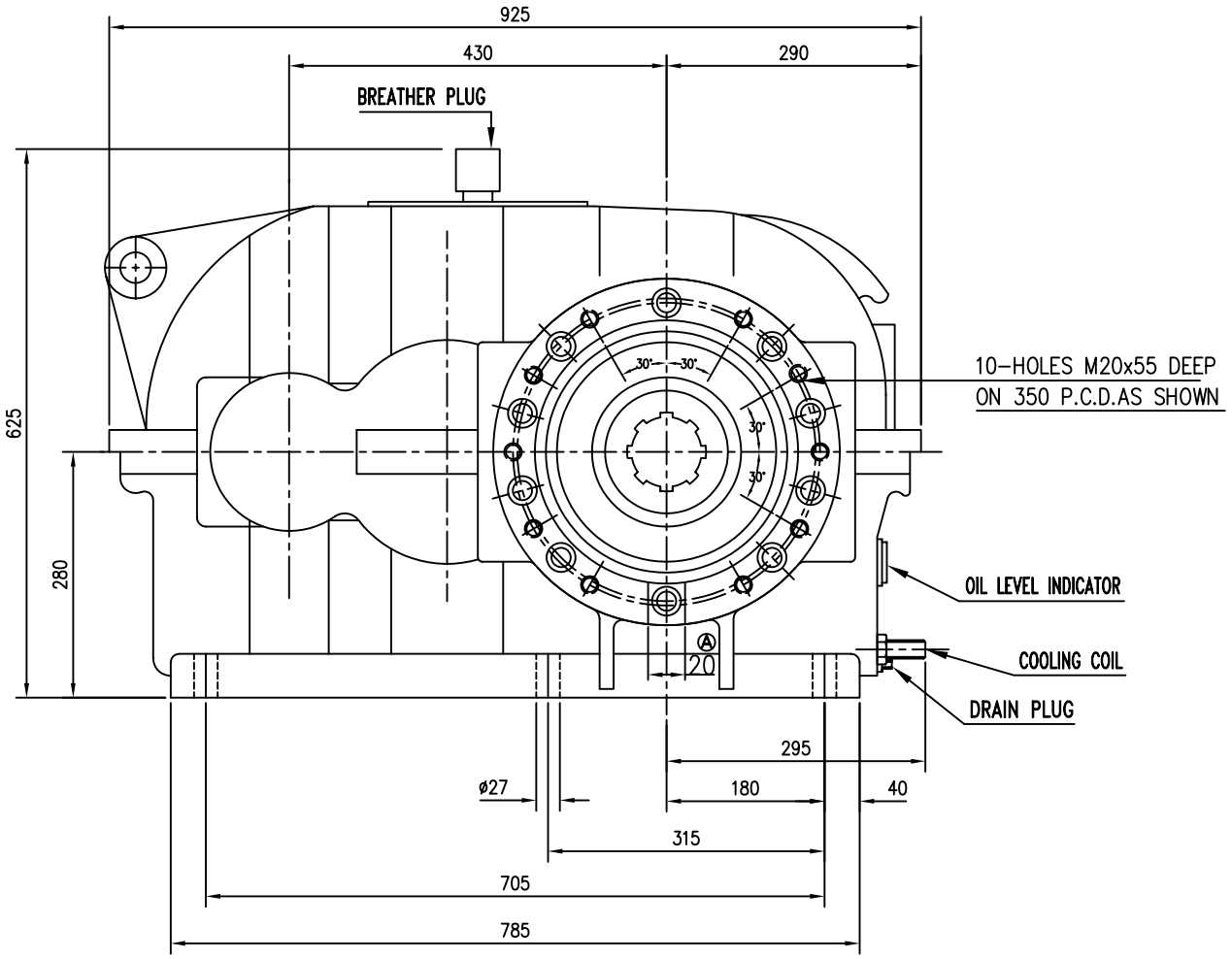

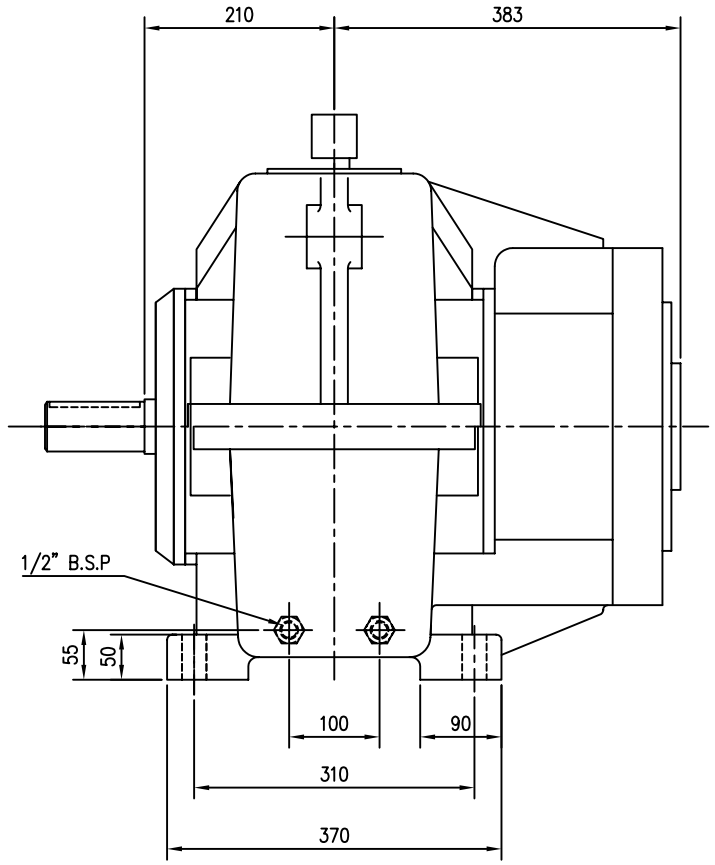

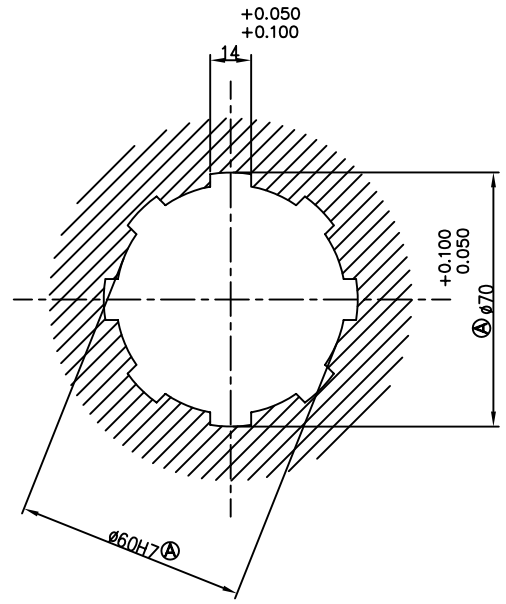

SPLINE DETAIL(OUTPUT)

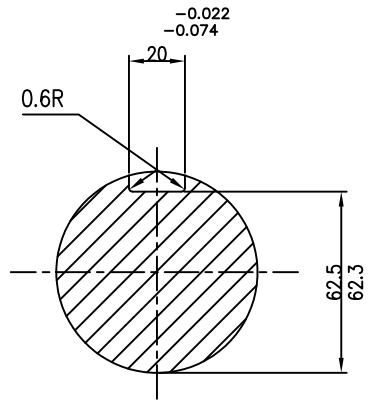

KEYWAY DETAIL(INPUT)

R 10:1

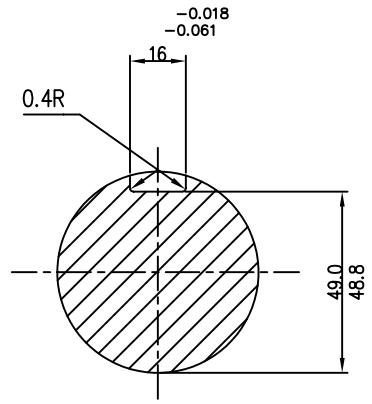

KEYWAY DETAIL(INPUT)

R 14:1 R 18:1

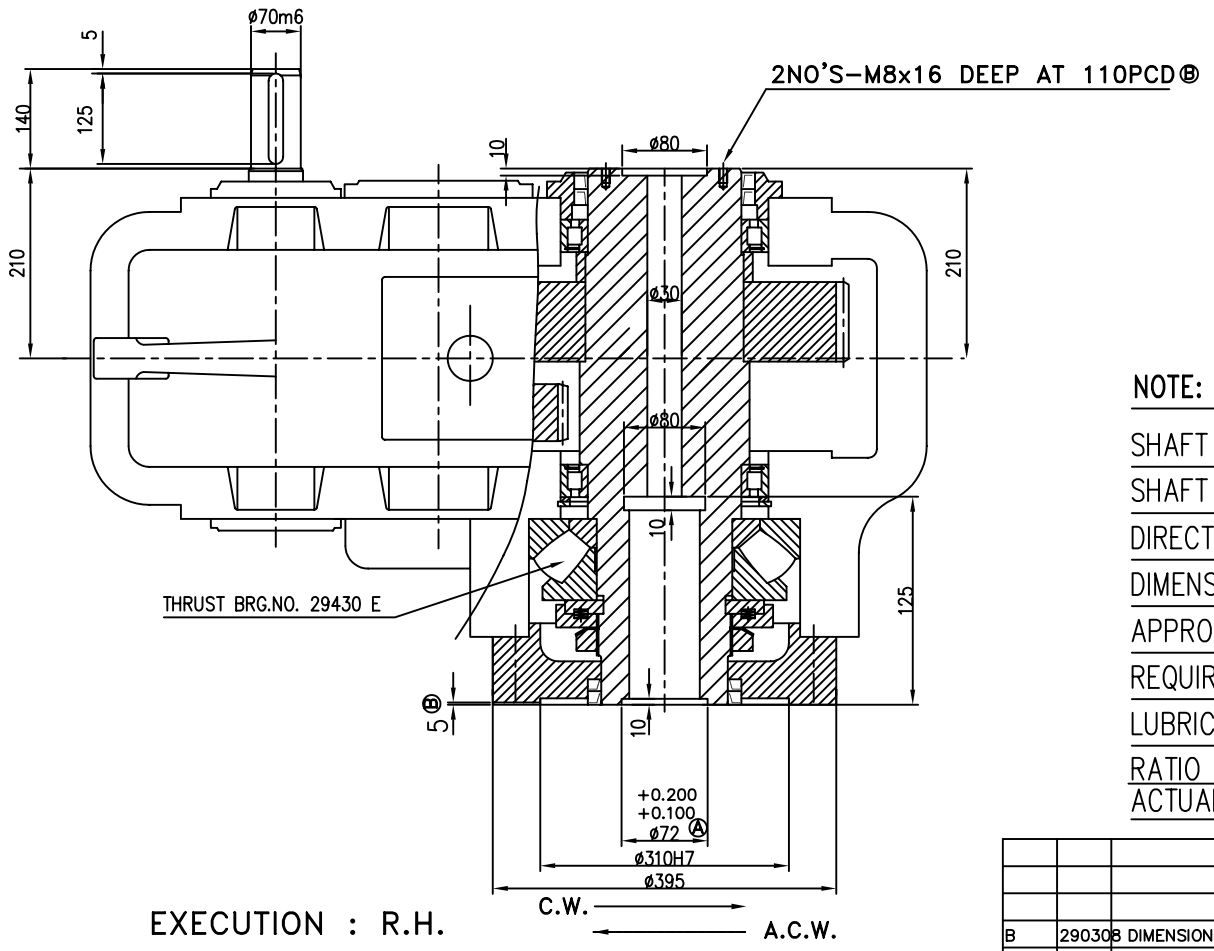

EXECUTION : R.H.

NOTE:

SHAFT ENDS WITH KEYS ACCORDING TO DIN 6885,PART-1,SHAPE-A.
SHAFT CENTERING ACCORDING TO DIN -332 DS WITH THREADS.
DIRECTION OF ROTATION OF OUTPUT SHAFT LOOKING TOWARDS ITS ENDS.
DIMENSIONS CERTIFIED FOR CONSTRUCTION.
APPROX. TOTAL WEIGHT WITHOUT OIL: 525 KGS.
REQUIRED APPROX. OIL QUANTITY PER GEAR BOX : 21 LTRS.
LUBRICATING OIL: SERVOMESH SP 320 OR EQUI.
RATIO :- 10:1
ACTUAL RATIO :- 10:1

RATIO	ACTUAL RATIO	INPUT DIA.	INPUT SHAFT EXT.LENG.
14:1	14.118:1	55	110
18:1	18.050:1	55	110

ISSUE	DATE	AMMENDMENTS
B	29030	DIMENSION ADDED AS PER CLIENT REQUIREMENTS.
A	60307	DIMENSION MARKED AS Ⓐ ARE CHANGED AND ADDED.

DRAWN DATE	KETKI JOSHI 9/2/07	
CHECKED DATE	NIMESH PANDYA	
APPROVED DATE		

DIMENSION SHEET FOR

SBH-250/EXT 29430E BEARING

SCALE : ORDER NO :

THIS DRG. IS PROPERTY OF ELECON ENGG.CO.LTD., LOANED TO THE RECIPIENT WHO AGREES THAT IT SHOULD NOT BE GIVEN OUT COPIED OR DUPLICATED FOR THE USE OF OTHERS BUT ONLY USED BY THE RECIPIENT FOR THE PURPOSE OF MAINTAINING THE EQUIPMENT TO WHICH IT REFERS.

ELECON

DRG.NO : 703-00-8150

ISSUE B

F:\DATA2\ACAD12\DMST\70306098

555X405