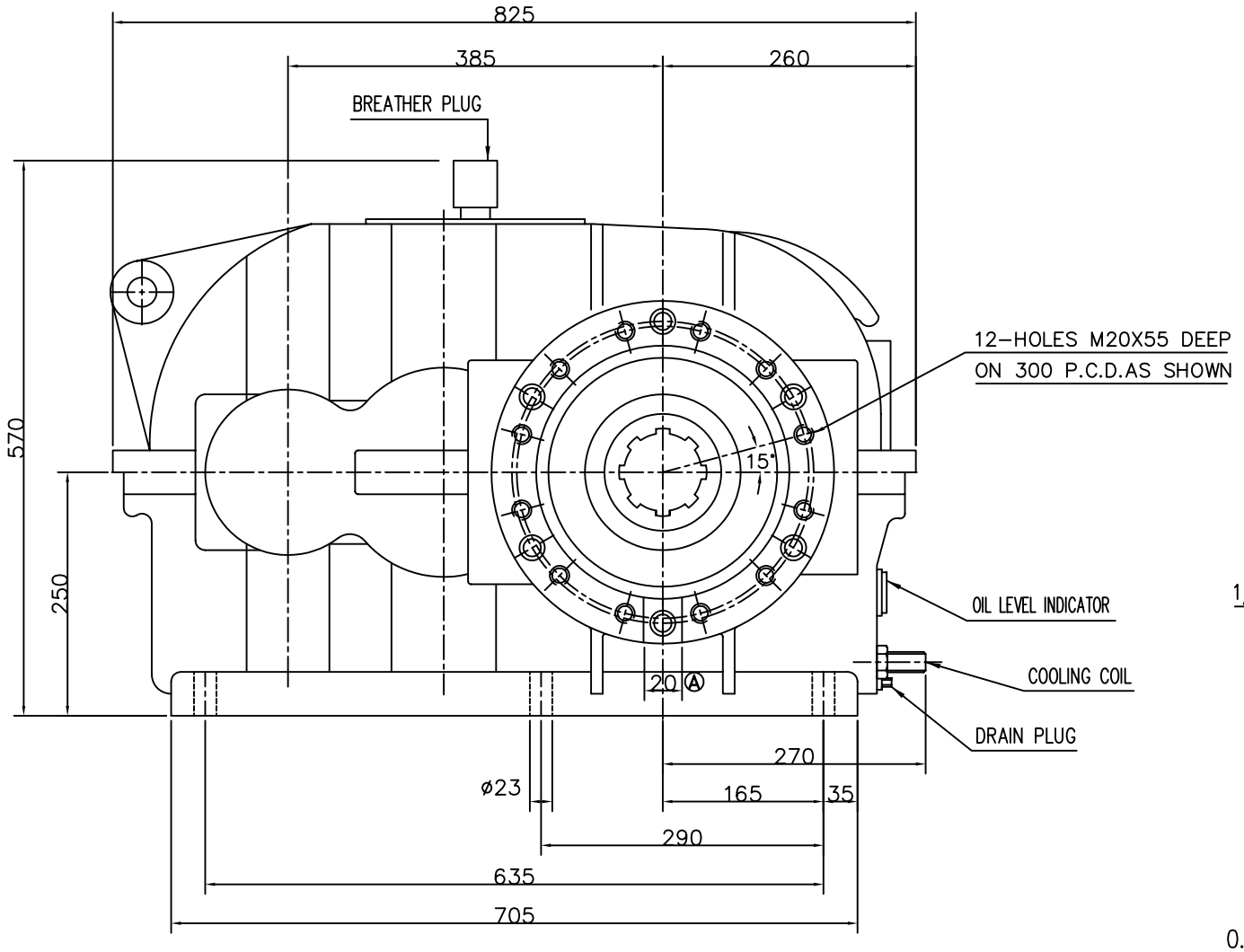

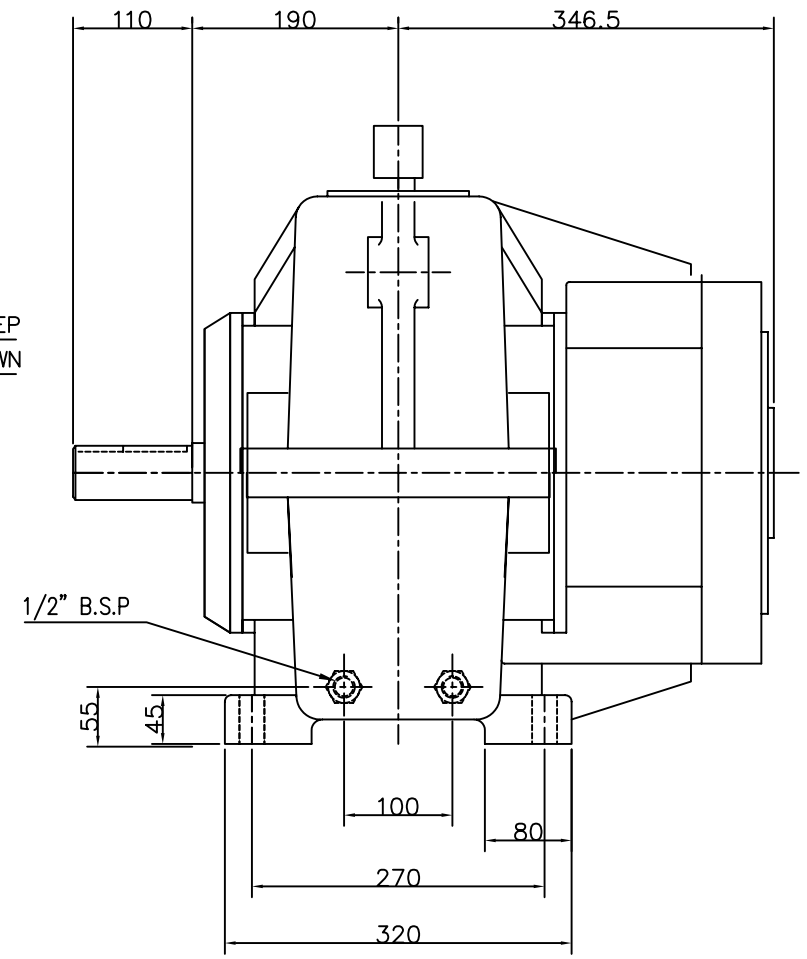

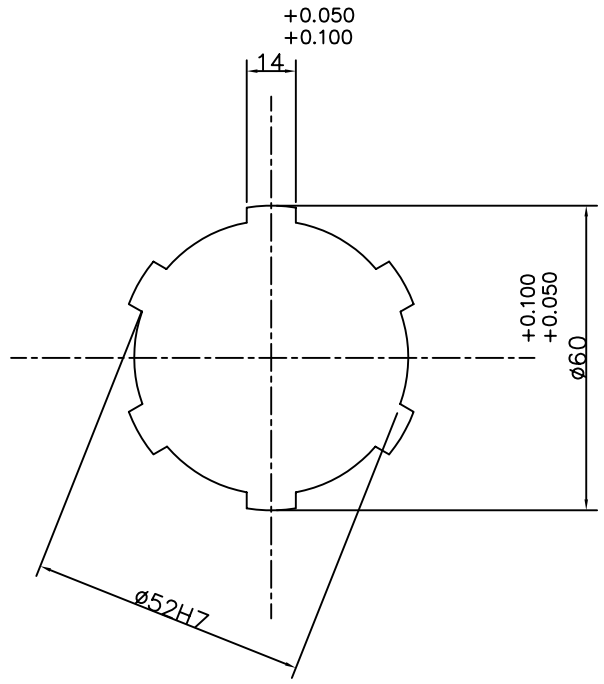

SPLINE DETAIL (OUTPUT) Ⓑ

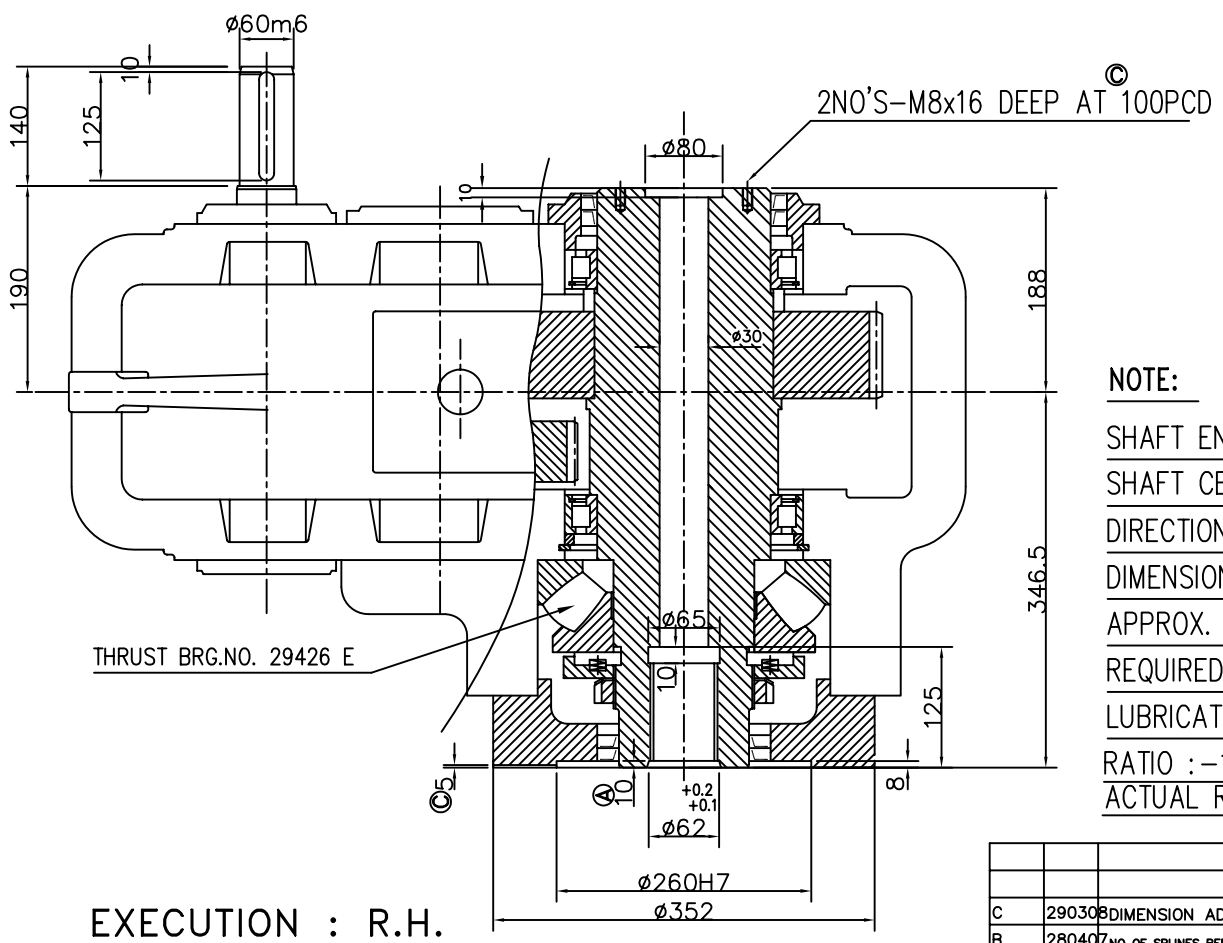

EXECUTION : R.H.

C.W. ⟶

⟵ A.C.W.

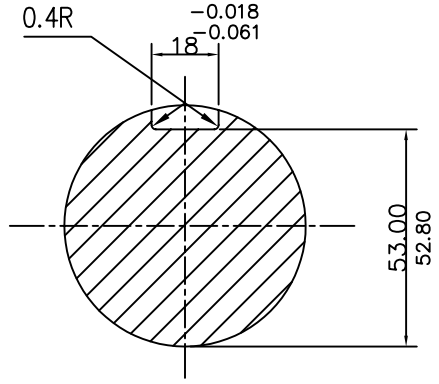

KEYWAY DETAIL(INPUT)--R10:1

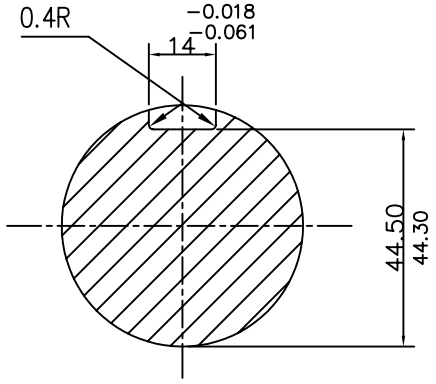

KEYWAY DETAIL(INPUT) --R 14:1;18:1

NOTE:

SHAFT ENDS WITH KEYS ACCORDING TO DIN 6885,PART-1,SHAPE-A.
SHAFT CENTERING ACCORDING TO DIN -332 DS WITH THREADS.
DIRECTION OF ROTATION OF OUTPUT SHAFT LOOKING TOWARDS ITS ENDS.
DIMENSIONS CERTIFIED FOR CONSTRUCTION.
APPROX. TOTAL WEIGHT WITHOUT OIL: 400 KGS.
REQUIRED APPROX. OIL QUANTITY PER GEAR BOX : 14 LTRS.
LUBRICATING OIL: SERVOMESH SP 320 OR EQUI.
RATIO :-10:1
ACTUAL RATIO :-10.266:1

RATIO	ACTUAL RATIO	INPUT DIA.	INPUT SHAFT EXT.LENG.
14:1	14.325:1	50	110
18:1	17.590:1	50	110

ISSUE	DATE	AMMENDMENTS
C	290308	DIMENSION ADDED AS PER CLIENT REQUIREMENTS.
B	280407	NO OF SPLINES REDUCED TO 6 INSTEADOF 8 DUE TO MFG. FEASIBILITY.
A	060307	DIMENSION MARKED AS Ⓐ ARE ADDED AS PER CLIENT REQD.

DRAWN DATE	KETKI JOSHI 13/02/07	
CHECKED DATE	NIMESH PANDYA	
APPROVED DATE		

DIMENSION SHEET FOR
SBH-225/EXT. 29426E BEARING

SCALE : ORDER NO :

THIS DRG. IS PROPERTY OF ELECON ENGG.CO.LTD., LOANED TO THE RECIPIENT WHO AGREES THAT IT SHOULD NOT BE GIVEN OUT COPIED OR DUPLICATED FOR THE USE OF OTHERS BUT ONLY USED BY THE RECIPIENT FOR THE PURPOSE OF MAINTAINING THE EQUIPMENT TO WHICH IT REFERS.

ELECON

DRG.NO : 703-00-8149

ISSUE C

F:\DATA2\ACAD12\DMST\703-00-5238

555X405