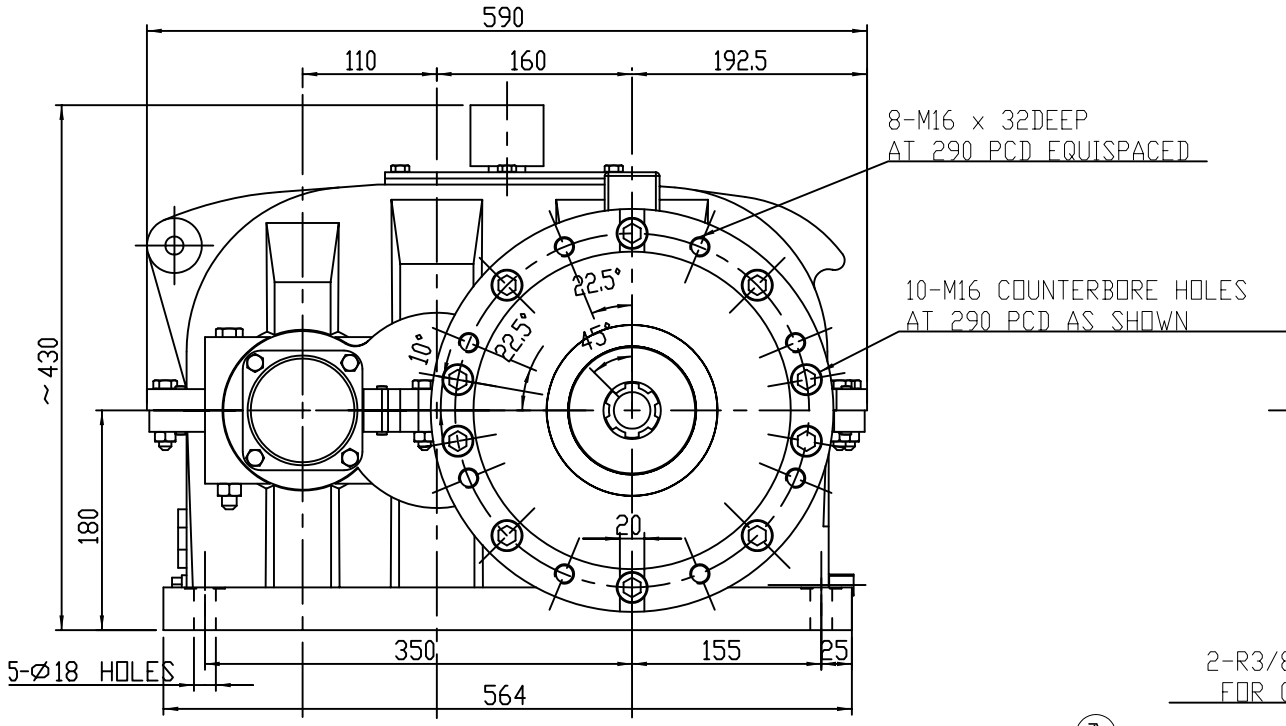

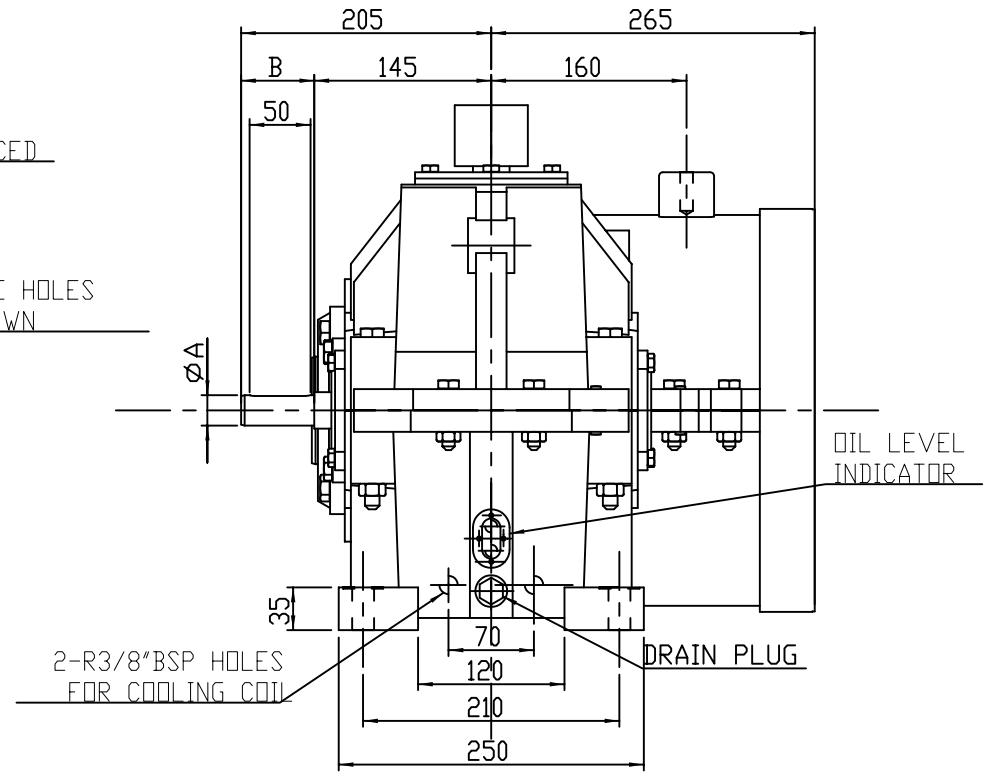

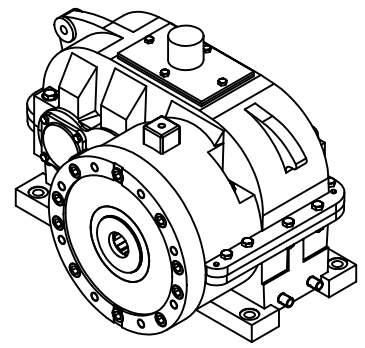

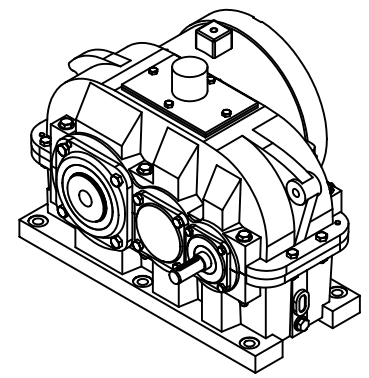

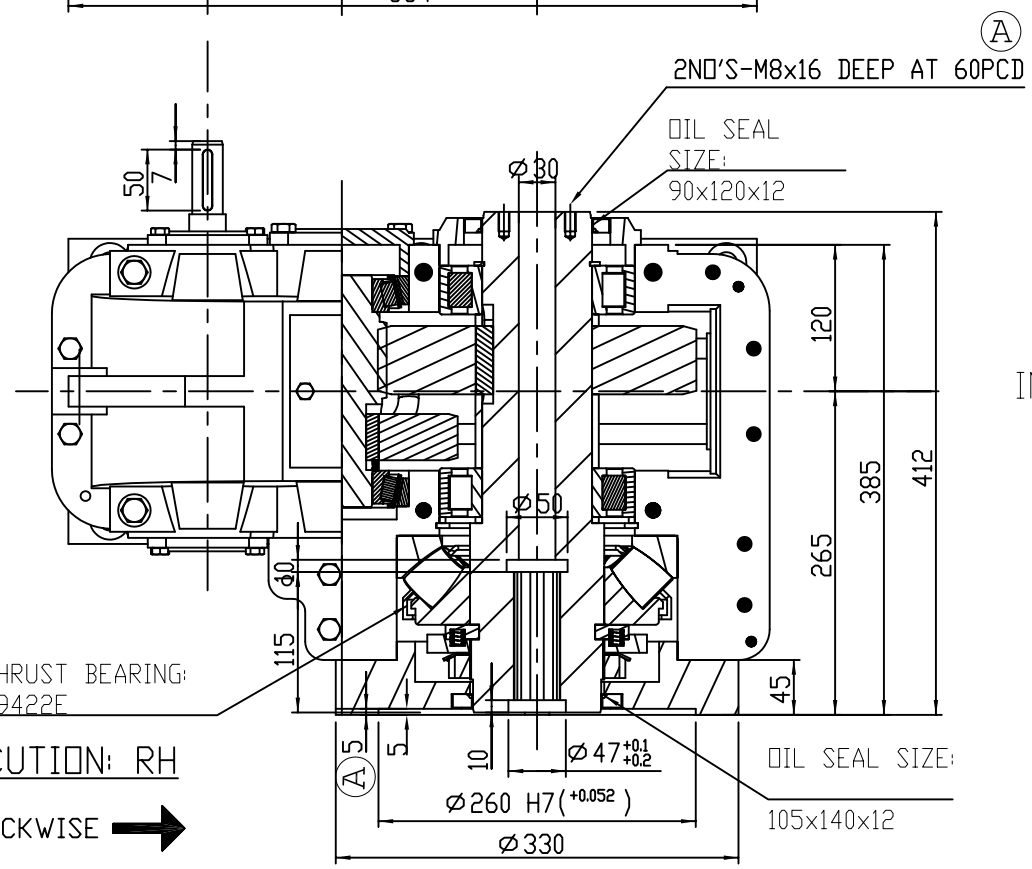

EXECUTION: RH

CLOCKWISE →

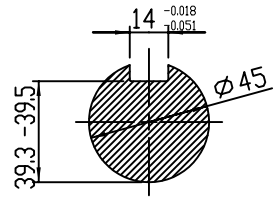

INPUT KEYWAY DETAILS
RATIO :- 10:1

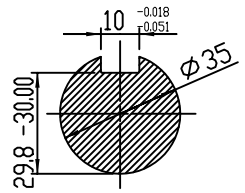

INPUT KEYWAY DETAILS
RATIO :- 14:1, 18:1

RATIO	ACTUAL RATIO	INPUT DIA.(A)	INPUT SHAFT EXTN.(B)
10:1	9.9771:1	Ø45	110
14:1	13.921:1	Ø35	80
18:1	17.899:1	Ø35	80

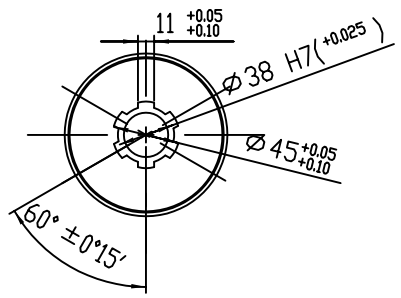

SPLINE DETAILS

NOTE:

SHAFT ENDS WITH KEYS ACCORDING TO DIN 6885, PART-1, SHAPE-A.
SHAFT CENTERING ACCORDING TO DIN 332 DS WITH THREADS.
TOLERANCE FIELD WITH SHAFT ENDS ISO FIT, UPTO Ø50 k6, OVER Ø50 m6.
DIRECTION OF ROTATION OF OUTPUT SHAFT LOOKING TOWARDS ITS ENDS.
FOUNDATION BOLTS TO BE INSERTED FROM BOTTOM OF THE CASING.
DIMENSIONS CERTIFIED FOR CONSTRUCTION.
APPROX. TOTAL WEIGHT WITHOUT OIL: 230 KGS.
REQD. APPROX. OIL QUANTITY PER GEARBOX: 9 LTRS.
LUBRICATING OIL: SERVOMESH SP320 OR EQUIVALENT.
ACTUAL RATIO: 9.9771:1
NOMINAL RATING: 74 KW.
INPUT SPEED: 1500RPM.

ISSUE	NO.OF REV.	SIGN	DATE	AMMENDMENTS
A	2	KAJ	290308	DIMENSION MARKED AS Ⓐ ARE ADDED AS PER CLIENT REQUIREMENTS.

DRAWN	CHINMAY 181007
CHECKED	K.A.JOSHI
APPROVED	N.G.PANDYA
SCALE :	

DIMENSION SHEET FOR
SBH-160 / EXT
RATIO:- 10:1; 29422E

THIS DRAWING IS, THE PROPERTY OF ELECON ENGINEERING CO. LTD. VALLABH VIDYANAGAR GUJARAT, LOANED TO THE RECIPIENT WHO AGREES THAT IT SHALL NOT BE GIVEN OUT COPIED OR DUPLICATED FOR THE USE OF ANOTHER BUT USED ONLY BY THE RECIPIENT FOR THE PURPOSE OF MAINTAINING THE EQUIPMENT TO WHICH IT REFERS.

MAIN GR.NO.

SUB GR.NO.

ELECON

ORDER NO :

DRG.NO. 703-00-8423

ISSUE A

(GA3) SIZE:384X285